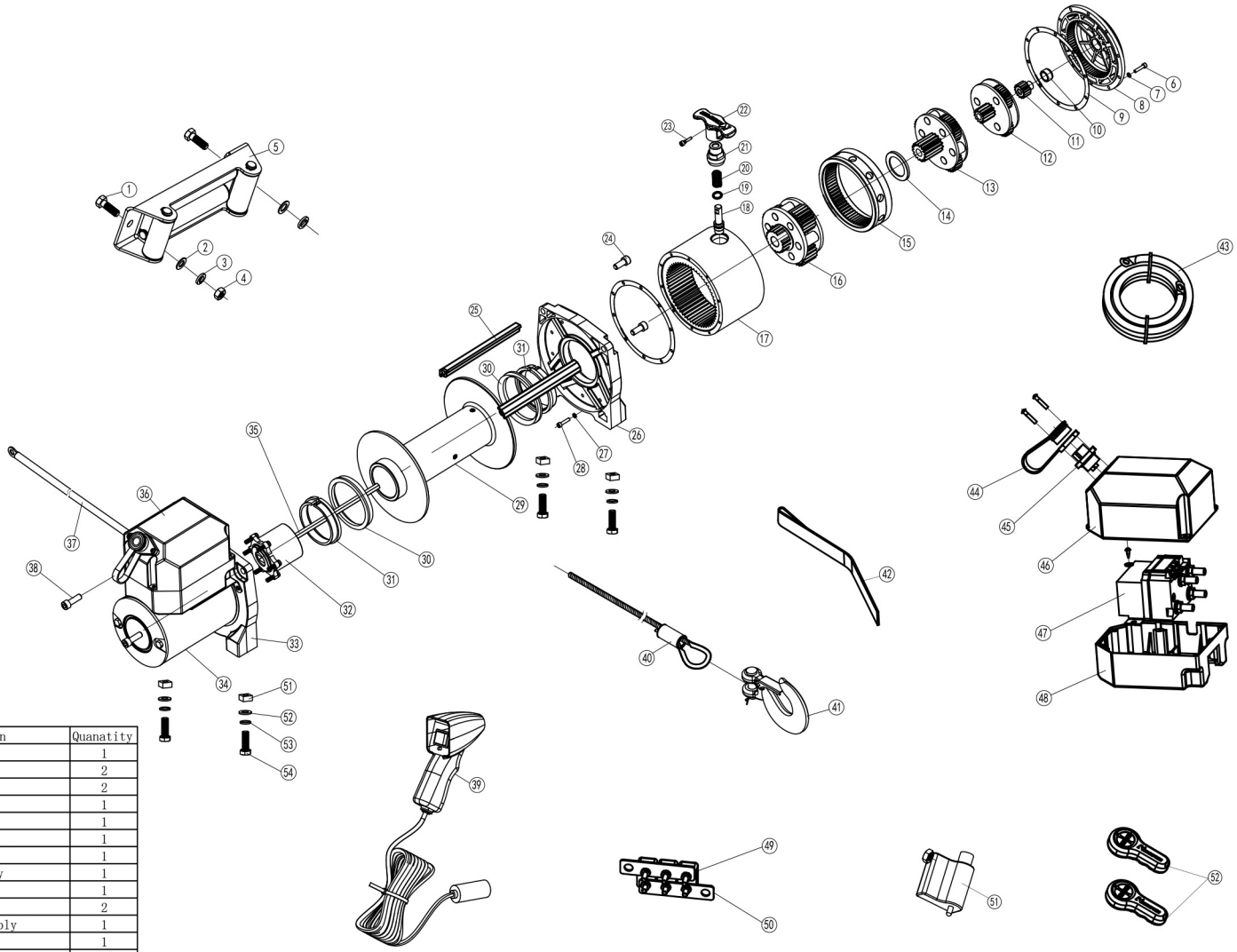

KW17122-1 part list

P/N	Description	Quanatity
1	Screw M12*25	2
2	Flat Washer Φ12	2
3	Spring Washer Φ12	2
4	Nut M12	2
5	Roller Fairlead	1
6	Screw M5*16	10
7	Spring Washer Φ5	10
8	Gearbox End Cover	1
9	Seal	2
10	Bearing	1
11	Sun Gear	1
12	1st Planetary Gear Assembly	1
13	2nd Planetary Gear Assembly	1
14	Washer	1
15	Ring Gear	1
16	3rd Planetary Gear Assembly	1
17	Gearbox Housing	1
18	Clutch Handle Pin	1
19	O-Ring Φ11	1
20	Clutch Handle Spring	1
21	Clutch Handle Base	1
22	Clutch Handle	1
23	Clutch Handle Screw M4*16	1
24	Screw M8*25	4
25	Tie bar	2
26	Gearbox Cover	1
27	Spring Washer Φ5	10
28	Screw M5*16	10

P/N	Description	Quanatity
29	Drum	1
30	Gasket Ring	2
31	Sliding Bearing	2
32	Brake Assembly	1
33	Motor Base	1
34	Motor Assembly	1
35	Drive Shaft	1
36	Control Box Assembly	1
37	Power Lead	1
38	Screw M8*25	2
39	Handle Switch Assembly	1
40	Wire Rope	1
41	Hook	1
42	Hand Saver Strap	1
43	Power Cord	1
44	Socket Cover	1
45	7 Pin Socket	1
46	Control Box Top Cover	1
47	Solenoid	1
48	Control Box Base Cover	1
49	Circuit Breaker	3
50	Circuit Breaker Connection Plate	2
51	Wireless Remote receiver	1
52	Wireless Remote	2
53	Nut M12	4
54	Flat Washer Φ12	4
55	Spring Washer Φ12	4
56	Screw M12*35	4